DIN #

44

ARIZONA **PUBLIC SERVICE** COMPANY

SURVEY NOTES

RM 605-00A

P. E.

W. A. 31- 1580

DATE: 8- 29- 67

SEC. 20-29 T. 4S R. 10W

CREW: Crouch - Porter

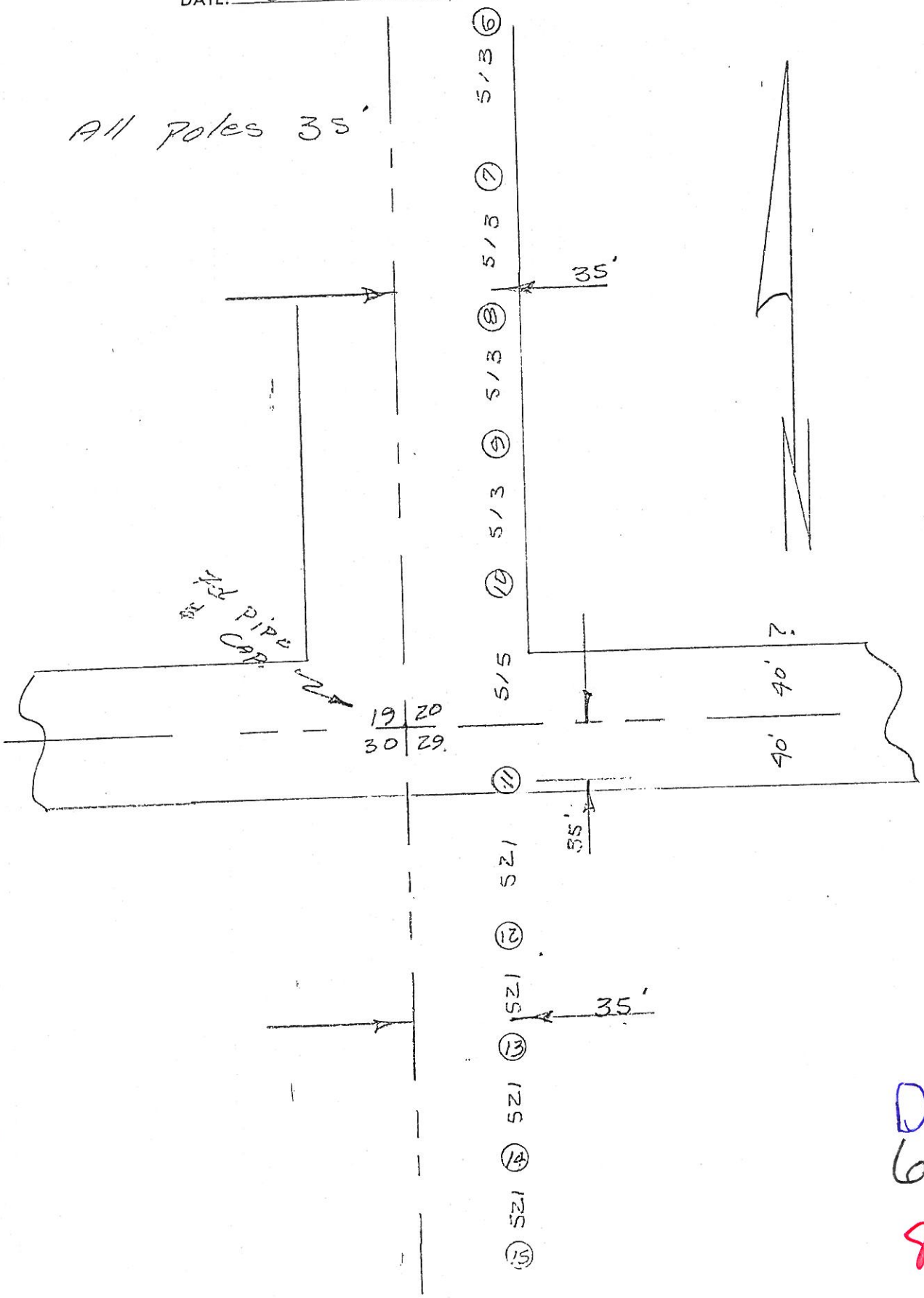

DIN #
65739
8/1967