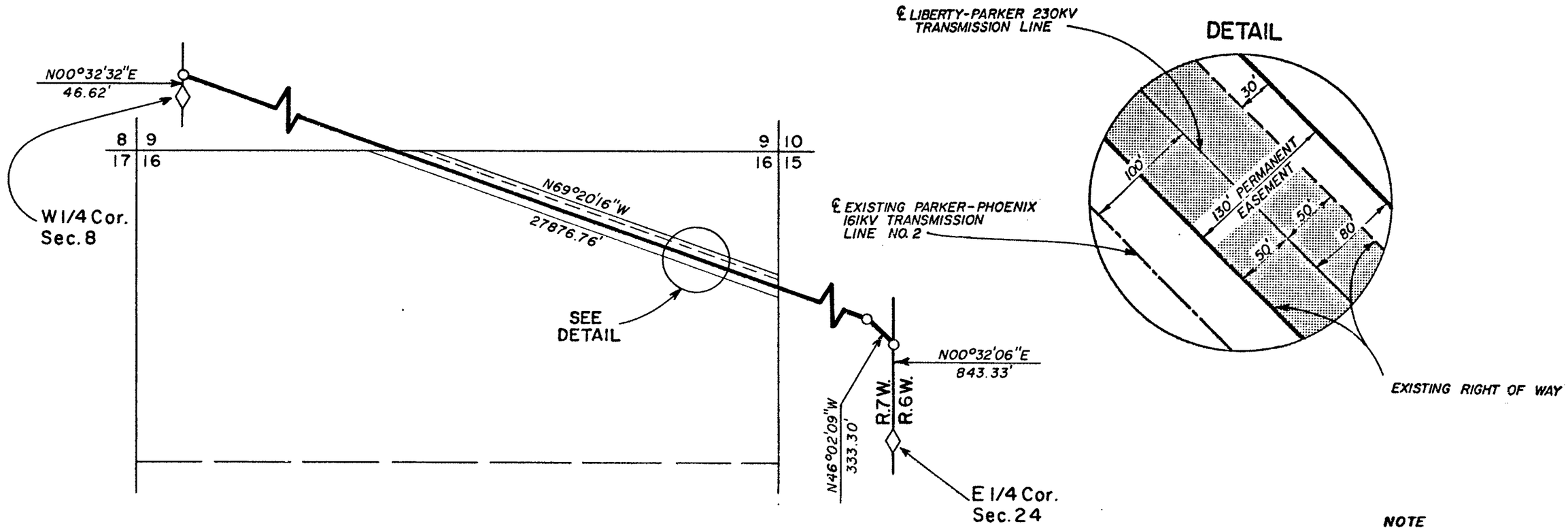

NOTE

Bearings based on Arizona state plane coordinates system, central zone

PERMANENT EASEMENT	EXISTING USBR 161KV RIGHT OF WAY
9.97 ± Ac.	7.78 ± Ac.

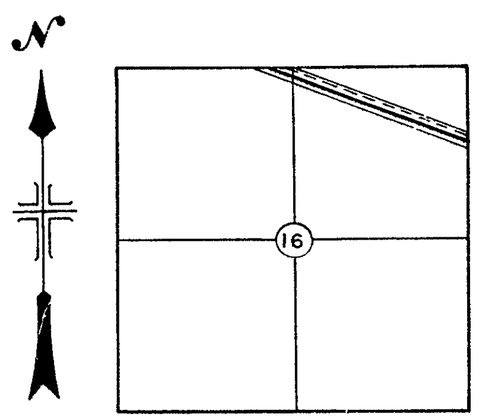

1000 0 1000 2000
SCALE OF FEET

STATE OF ARIZONA
9.97 ± ACRES–PERMANENT EASEMENT
A PART OF
N1/2 SEC. 16, T.5N., R.7W., G&SRM
MARICOPA COUNTY, ARIZONA

UNITED STATES
DEPARTMENT OF THE INTERIOR
BUREAU OF RECLAMATION
CENTRAL ARIZONA PROJECT
TRANSMISSION FACILITIES – ARIZONA

TRANSMISSION LINE
LIBERTY-PARKER 230KV
RIGHTS-OF-WAY

DRAWN K.K. SUBMITTED
TRACED RECOMMENDED
CHECKED K.W.R. APPROVED

PHOENIX, ARIZONA AUGUST, 1977 344-330-2014

TRACT LP-1-26i

DIN# 64261-1