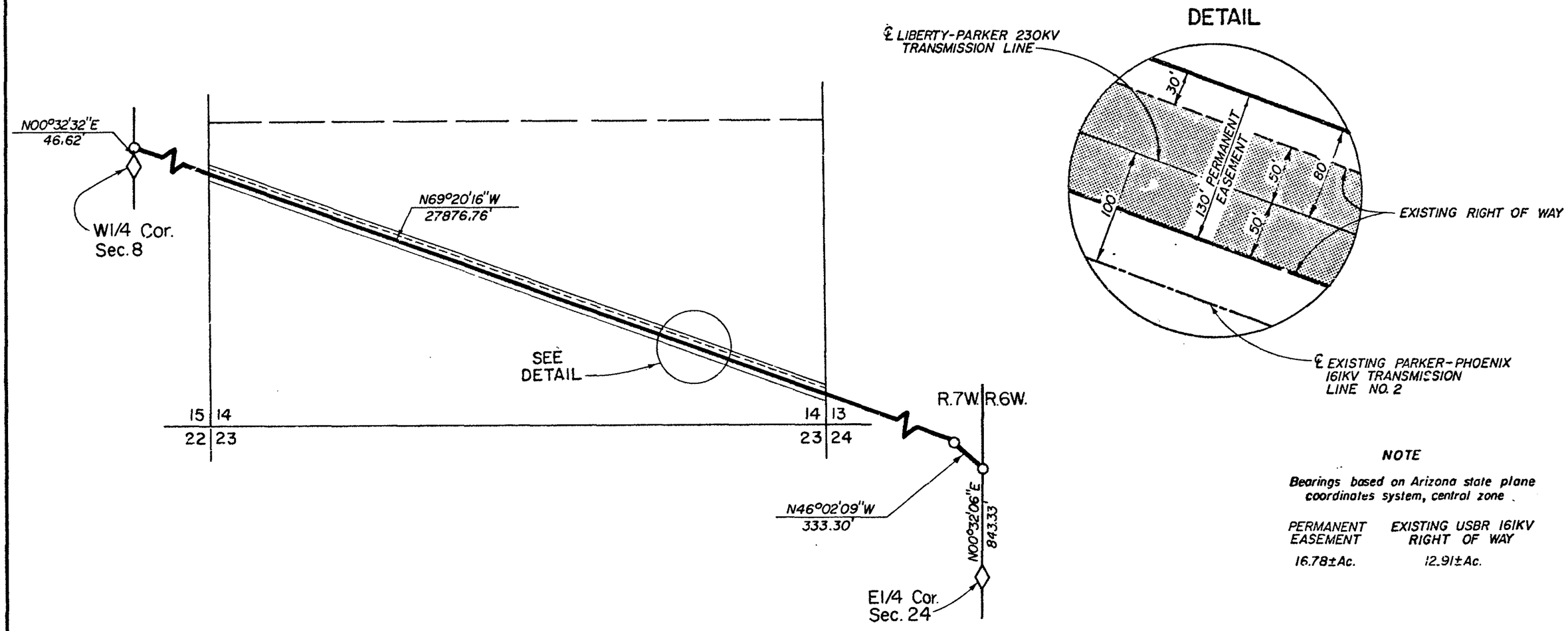

NOTE

Bearings based on Arizona state plane coordinates system, central zone.

PERMANENT EASEMENT	EXISTING USBR 161KV RIGHT OF WAY
16.78±Ac.	12.91±Ac.

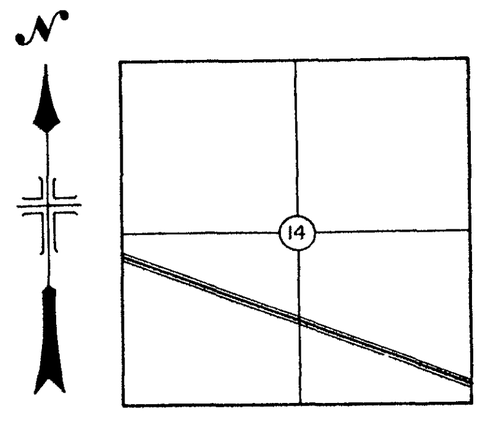

1000 0 1000 2000
SCALE OF FEET

UNITED STATES
DEPARTMENT OF THE INTERIOR
BUREAU OF RECLAMATION
CENTRAL ARIZONA PROJECT
TRANSMISSION FACILITIES – ARIZONA

TRANSMISSION LINE
LIBERTY-PARKER 230KV
RIGHTS-OF-WAY

DRAWN D. Prescott SUBMITTED
TRACED RECOMMENDED
CHECKED K.V.R. APPROVED

PHOENIX, ARIZONA AUGUST, 1977 | 344-330-2012

TRACT NO. LP-1-26g

STATE OF ARIZONA
16.78± ACRES–PERMANENT EASEMENT
A PART OF
SEC. 14, T.5N., R.7W., G&SRM
MARICOPA COUNTY, ARIZONA

DIN # 64259-1