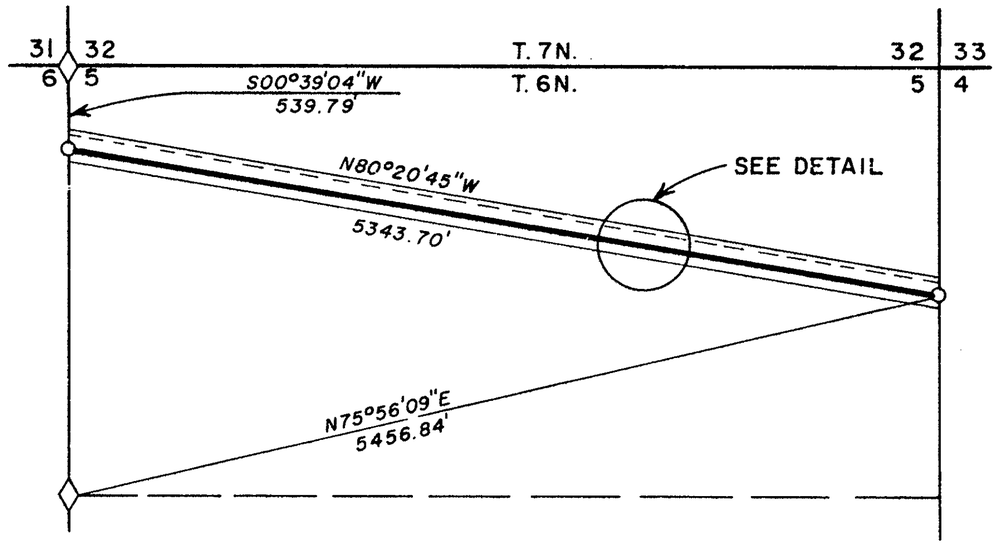

DETAIL

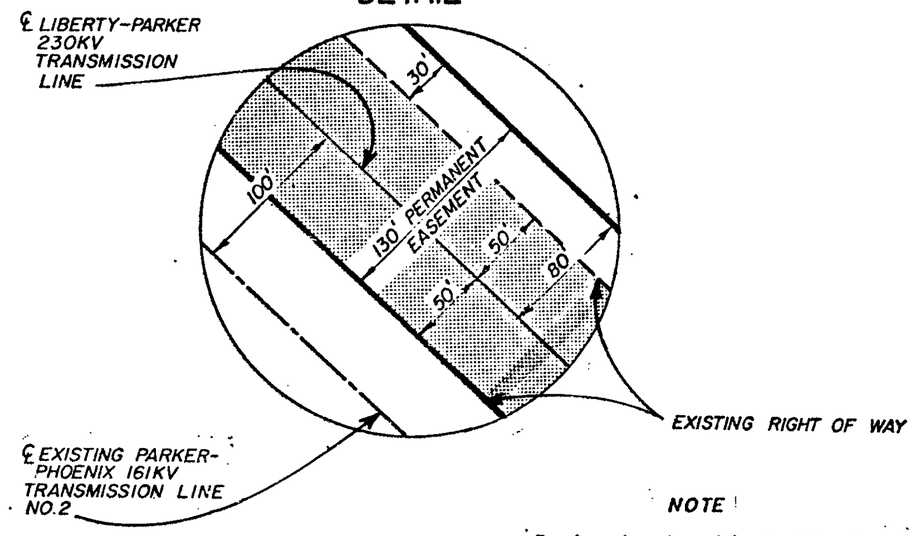

NOTE

Bearings based on Arizona state plane coordinates system, central zone

PERMANENT EASEMENT	EXISTING USBR 161KV RIGHT OF WAY
15.95± Ac.	12.27± Ac.

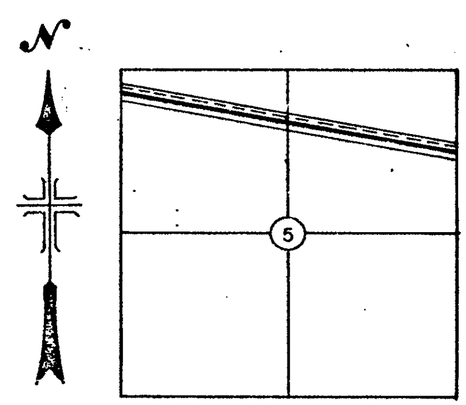

1000 0 1000 2000
SCALE OF FEET

STATE OF ARIZONA
15.95± ACRES-PERMANENT EASEMENT
A PART OF
N1/2SEC.5,T.6N.,R.9W.,G&SRM
MARICOPA COUNTY, ARIZONA

ALWAYS THINK SAFETY

UNITED STATES
DEPARTMENT OF THE INTERIOR
BUREAU OF RECLAMATION
CENTRAL ARIZONA PROJECT
TRANSMISSION FACILITIES - ARIZONA

TRANSMISSION LINE
LIBERTY-PARKER 230KV

DESIGNED _____ SUBMITTED _____
DRAWN _____ RECOMMENDED _____
CHECKED _____ APPROVED _____

PHOENIX, ARIZONA AUGUST, 1977 344-330-2004

TRACT NO. LP-1-26m

DIN # 64255-1