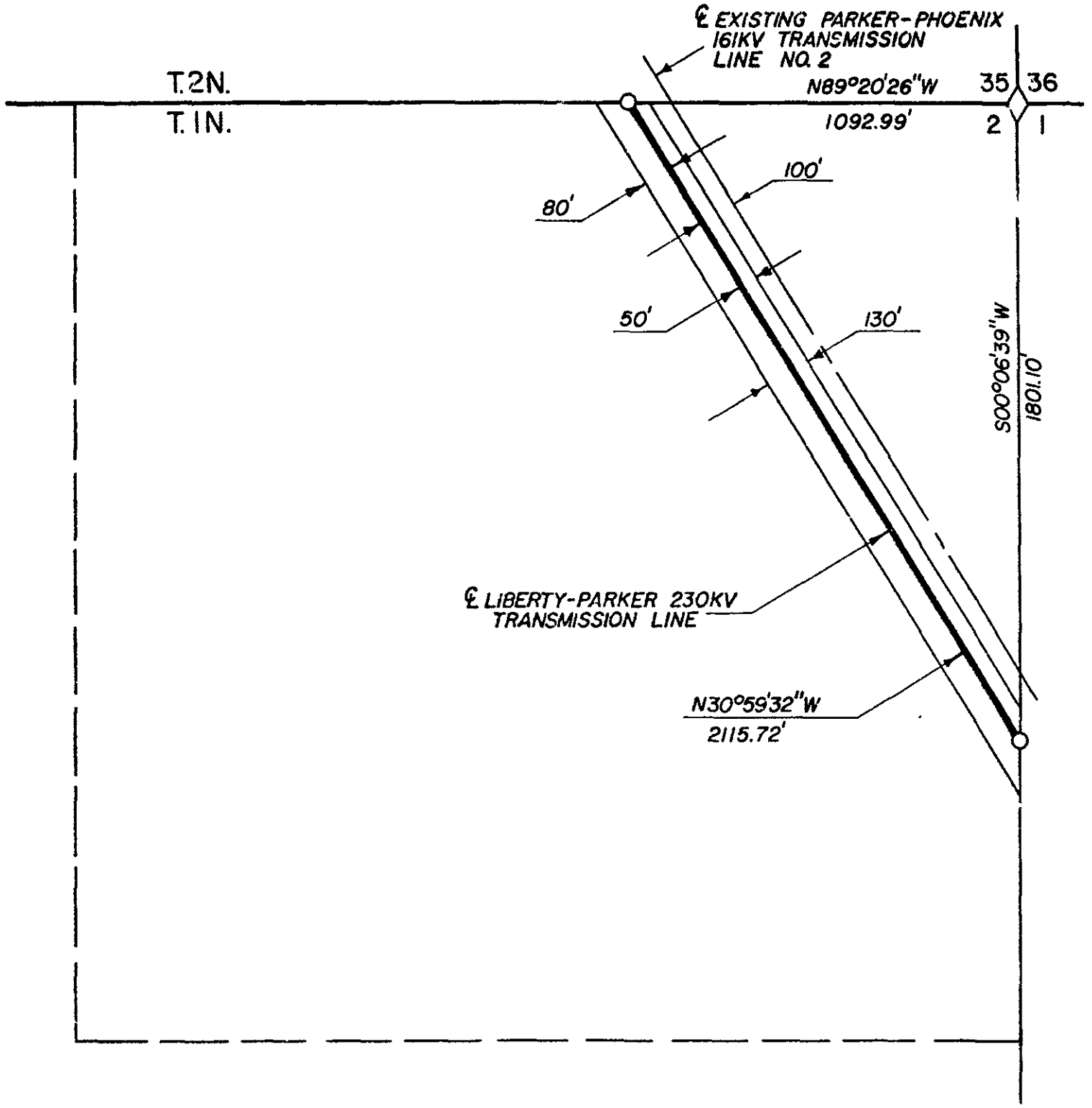

NOTE

Bearings based on Arizona state plane coordinates system, central zone.

STATE OF ARIZONA
6.42± ACRES–PERMANENT EASEMENT
A PART OF
NE1/4 SECTION 2, T.1N., R.4W., G&SRM
MARICOPA COUNTY, ARIZONA

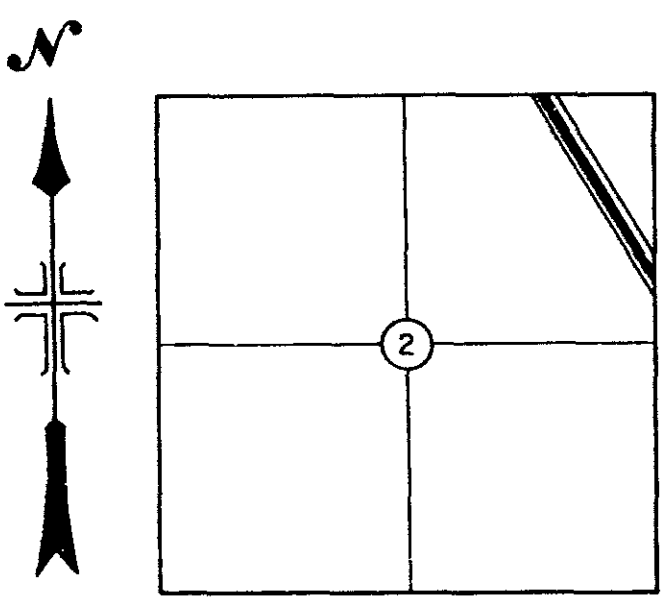

500 0 500 1000
SCALE OF FEET

UNITED STATES
DEPARTMENT OF THE INTERIOR
BUREAU OF RECLAMATION
CENTRAL ARIZONA PROJECT
TRANSMISSION FACILITIES – ARIZONA

TRANSMISSION LINE
LIBERTY-PARKER 230KV
RIGHTS - OF - WAY

DRAWN JMV SUBMITTED
TRACED RECOMMENDED
CHECKED APPROVED

PHOENIX, ARIZONA AUGUST, 1977 | 344-330-1474

TRACT NO. LP-1-26

DIN # 64251