# BUREAU OF RECLAMATION

## ARIZONA PROJECTS OFFICE

| BY ROZUM | DATE 8-09-85 | FEATURE Tucson Aqueduct R-3 |
|---|---|---|
| 17 SECTION | 10S TOWNSHIP | 11E RANGE G.S.R.M. |

ARIZONA STATE PLANE COORDINATES Central ZONE

GRID FACTOR 0.999848 MEAN ELEVATION 2140

FIELD BOOKS 330-344-05.37.01.08-4

DIN# 63122-1

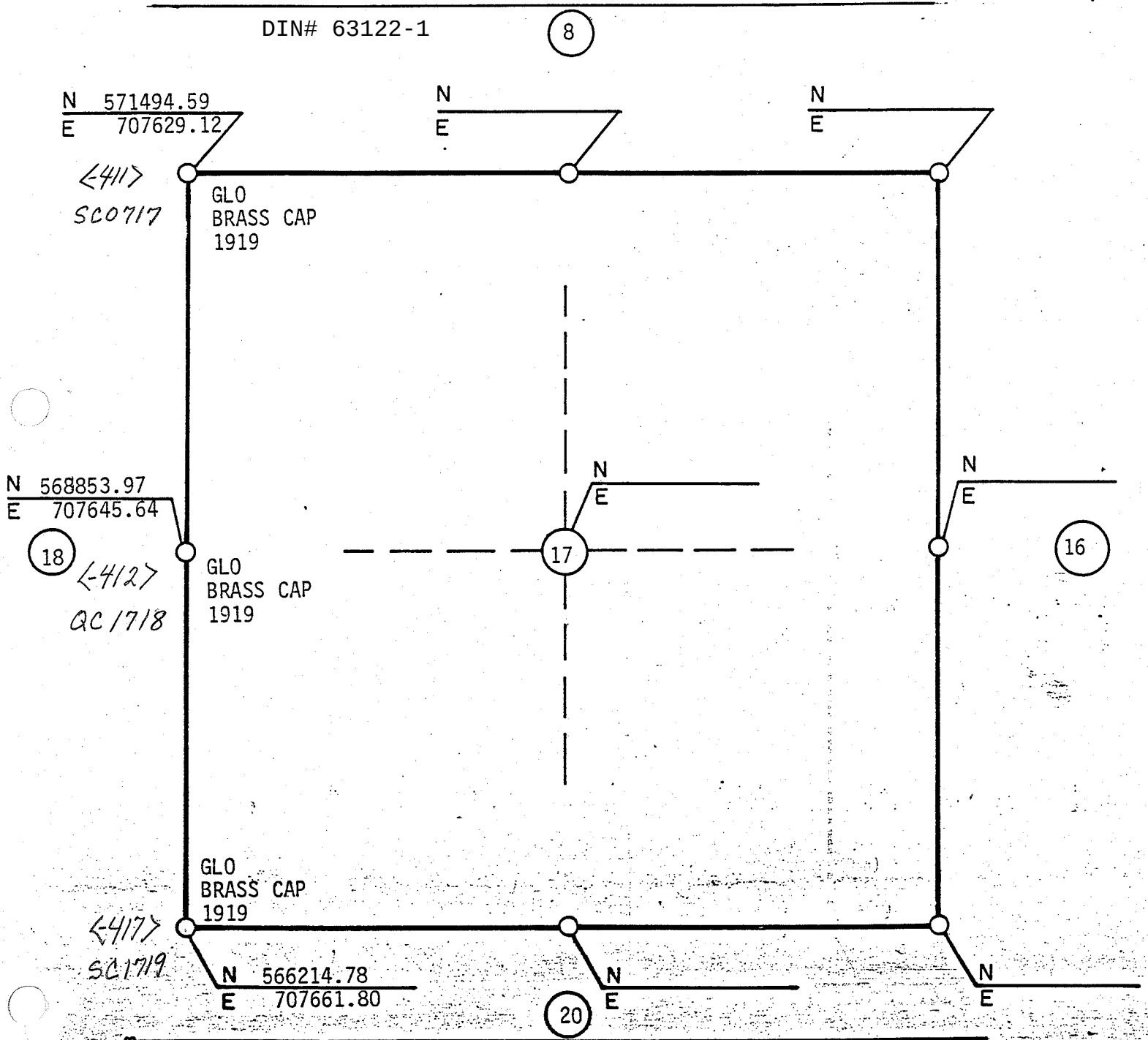


| REVISIONS | |
|---|---|
| | |
| | |

ALL BEARINGS AND DISTANCES ARE GRID