DIN# 62816-1

BUREAU OF RECLAMATION

ARIZONA PROJECTS OFFICE

BY	DATE	FEATURE
Rieck	3-17-87	Granite Reef Aquaduct Reach-11

SECTION	TOWNSHIP	RANGE	
29	4N	4E	G.S.R.M.

ARIZONA STATE PLANE COORDINATES Central ZONE

GRID FACTOR 0.999826 MEAN ELEVATION 1550

FIELD BOOKS 330-344-05.16.00.04-1

330-344-05.16.01.08-1

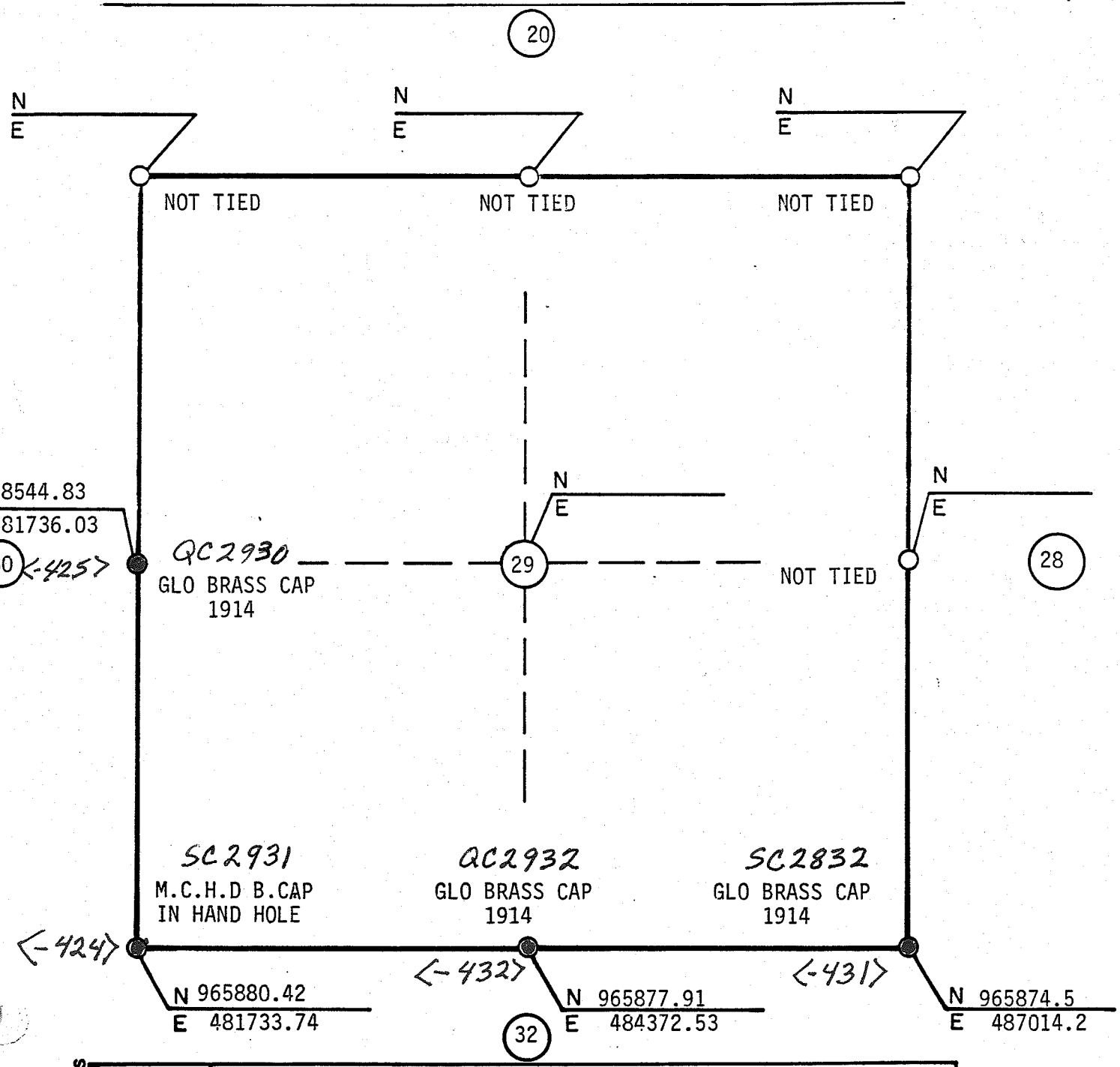

REVISIONS	

ALL BEARINGS AND DISTANCES ARE GRID