BUREAU OF RECLAMATION

ARIZONA PROJECTS OFFICE

BY	DATE	FEATURE
Rieck	11-10-86	Harquahala Distribution System

16 SECTION | 1S TOWNSHIP | 9W RANGE | G.S.R.M.

ARIZONA STATE PLANE COORDINATES Central ZONE

GRID FACTOR 1.000017 MEAN ELEVATION 1235

FIELD BOOKS 330-344.06.02.01.08-1

DIN# 62529-1

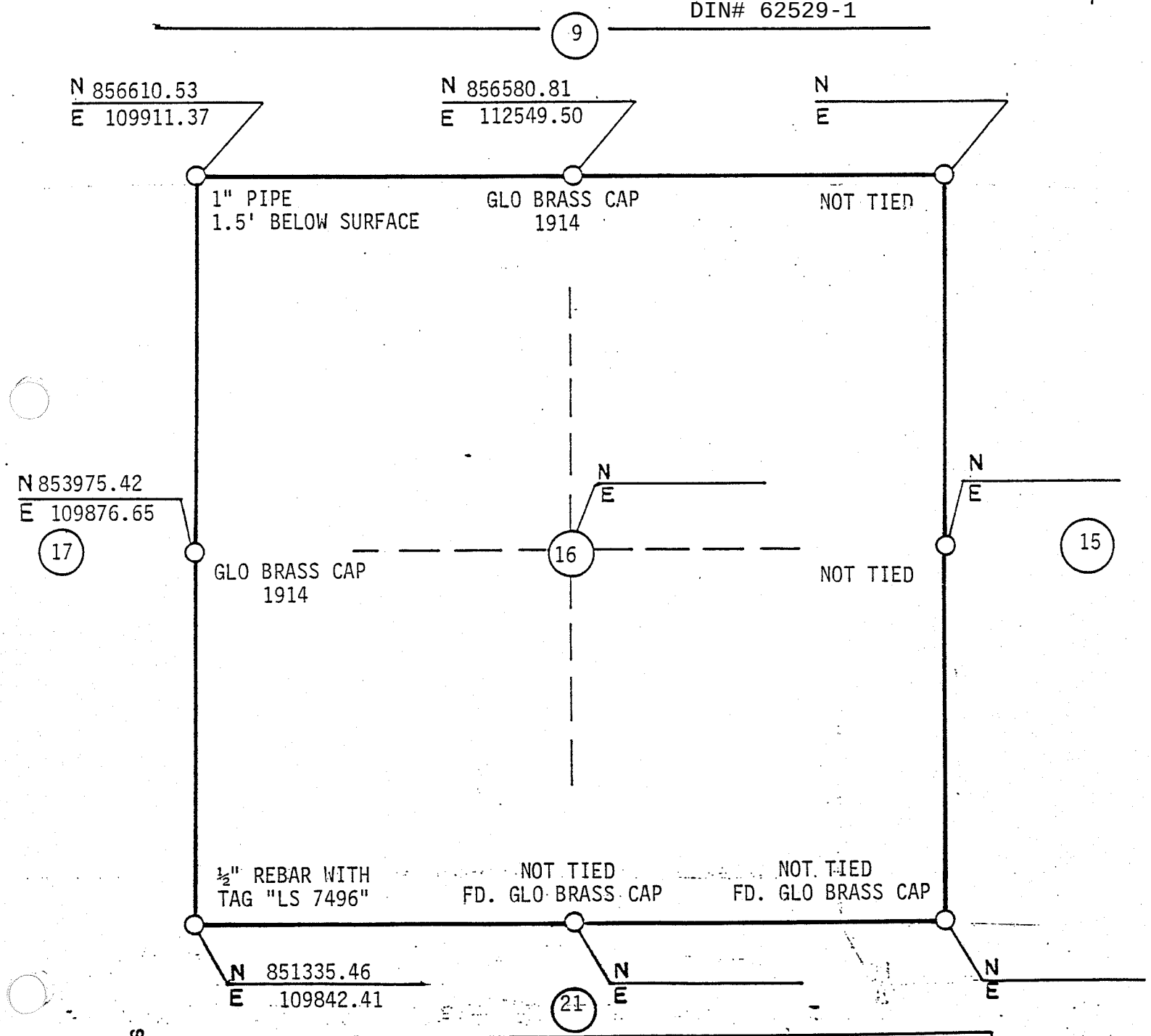

REVISIONS	

ALL BEARINGS AND DISTANCES ARE GRID