BUREAU OF RECLAMATION

ARIZONA PROJECTS OFFICE

BY Rieck	DATE 11-10-86	FEATURE Harquahala Distribution System
32 SECTION	1N TOWNSHIP	9W RANGE G.S.R.M.

ARIZONA STATE PLANE COORDINATES Central ZONE

GRID FACTOR 1.000022 MEAN ELEVATION 1210

FIELD BOOKS 330-344.06.02.01.08-1

DIN# 62512-1

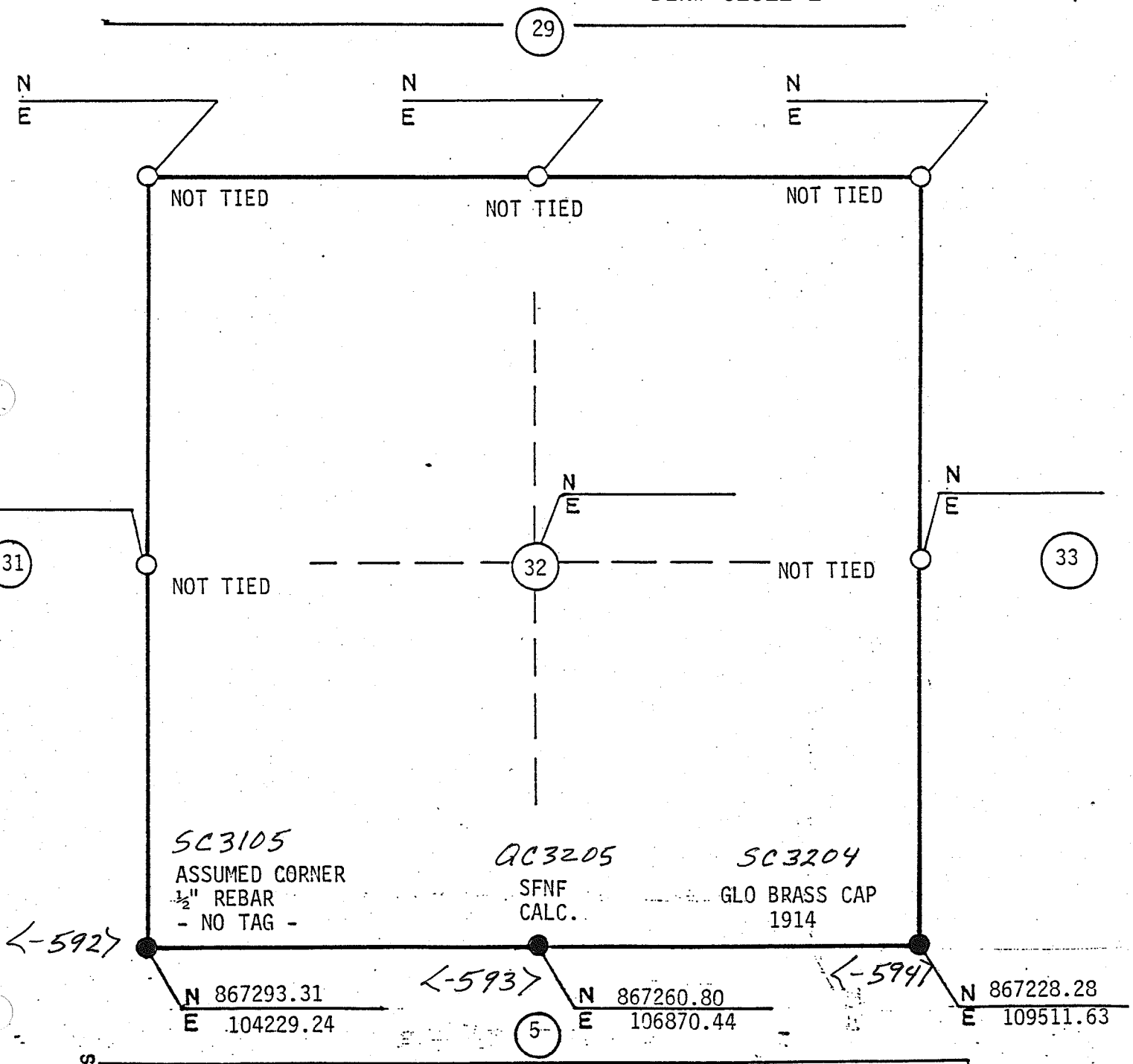

REVISIONS	

ALL BEARINGS AND DISTANCES ARE GRID