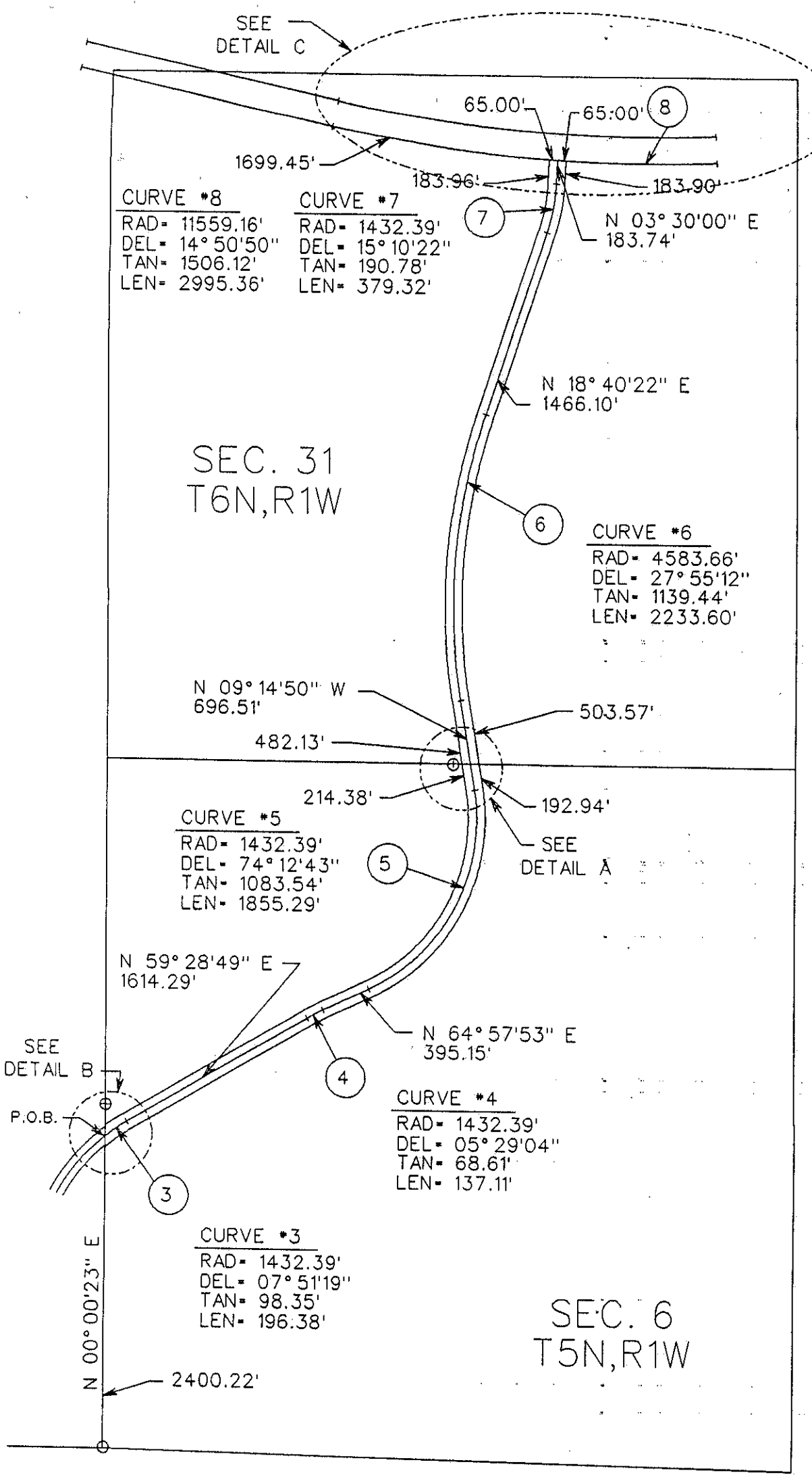

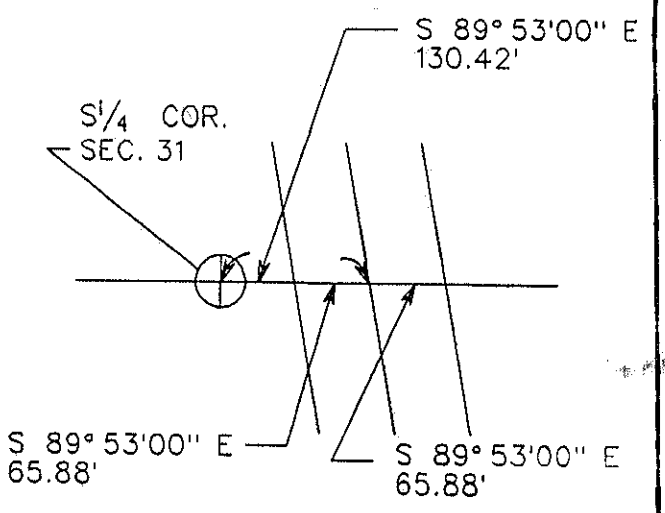

DETAIL A
N.T.S.

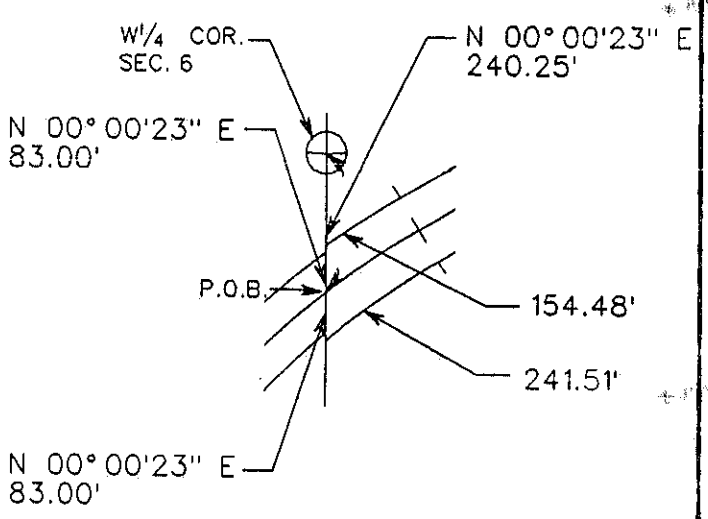

DETAIL B
N.T.S.

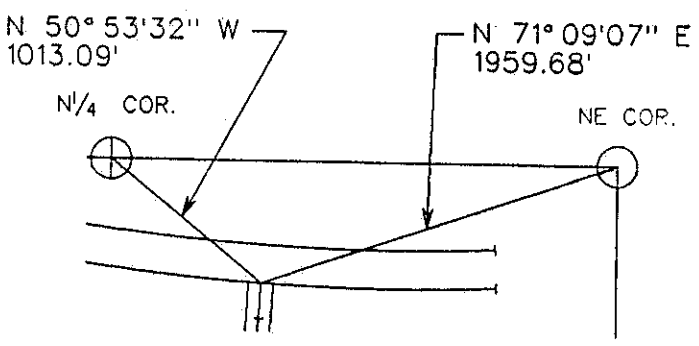

DETAIL C
N.T.S.

LEGAL DESCRIPTION

A strip of land lying within Section Six (6), Township Five (5) North, Range One (1) West, and Section Thirty-one (31), Township Six (6) North, Range One (1) West of the Gila and Salt River Base and Meridian, Maricopa County, Arizona:

Said strip being 130.00 feet in width and being 65.00 feet (measured at right angles) on each side of the following described centerline:

BEGINNING at a point South 00° 00'23" West, a distance of 240.25 feet from the West one-quarter (W 1/4) corner of Section 6; THENCE Northeasterly along a curve to the right, said curve having a central angle of 07° 51'19" and a radius of 1432.39 feet, an arc distance of 196.38 feet to a Point of Tangency; THENCE North 59° 28'49" East a distance of 1614.29 feet to a Point of Curvature of a tangent curve to the right, having a central angle of 05° 29'04" and a radius of 1432.39 feet; THENCE Northeasterly along said curve, an arc distance of 137.11 feet to a Point of Tangency; THENCE North 64° 57'53" East a distance of 395.15 feet to a Point of Curvature of a tangent curve to the left, having a central angle of 74° 12'43" and a radius of 1432.39 feet; THENCE Northerly along said curve, an arc distance of 1855.29 feet to a Point of Tangency; THENCE North 09° 14'50" West, a distance of 696.51 feet to a Point of Curvature of a tangent curve to the right, having a central angle of 27° 55'12" and a radius of 4583.66 feet; THENCE Northerly along said curve, an arc distance of 2233.60 feet to a Point of Tangency; THENCE North 18° 40'22" East, a distance of 1466.10 feet to a Point of Curvature of a tangent curve to the left, having a central angle of 15° 10'22" and a radius of 1432.39 feet; THENCE Northerly along said curve, an arc distance of 379.32 feet to a Point of Tangency; THENCE North 03° 30'00" East, a distance of 183.74 feet to the South Right of Way line of State Route 74 and the terminus of the herein described centerline.

Containing 1,180,053 sq. ft. = 27.0903 acres

DIN# 61871

N.T.S.

BLM R/W APPLICATION

MARICOPA COUNTY
HIGHWAY DEPARTMENT
163 AVENUE
DOVE VALLEY RD. TO SR 74

Project No. 68710-0P	Item No. W-5420	Drawn: R.E.D.	Date: March 14, 1991
Revised:	RF# 4523	Checked:	R/W Agent: T. CHAVEZ