REPORT OF SURVEY

FOR

PHOENIX UNION HIGH SCHOOL SYSTEM

P. O. BOX 3947
PHOENIX, ARIZONA

OF

The East Line of Lot 8, Jones Subdivision Book 5 of Maps, Page 40, M.C.R and the N.W. Cor. N. 190', Lot 4, Block 6, Dennis Addition Book 1 of Maps, Page 8, M.C.R.

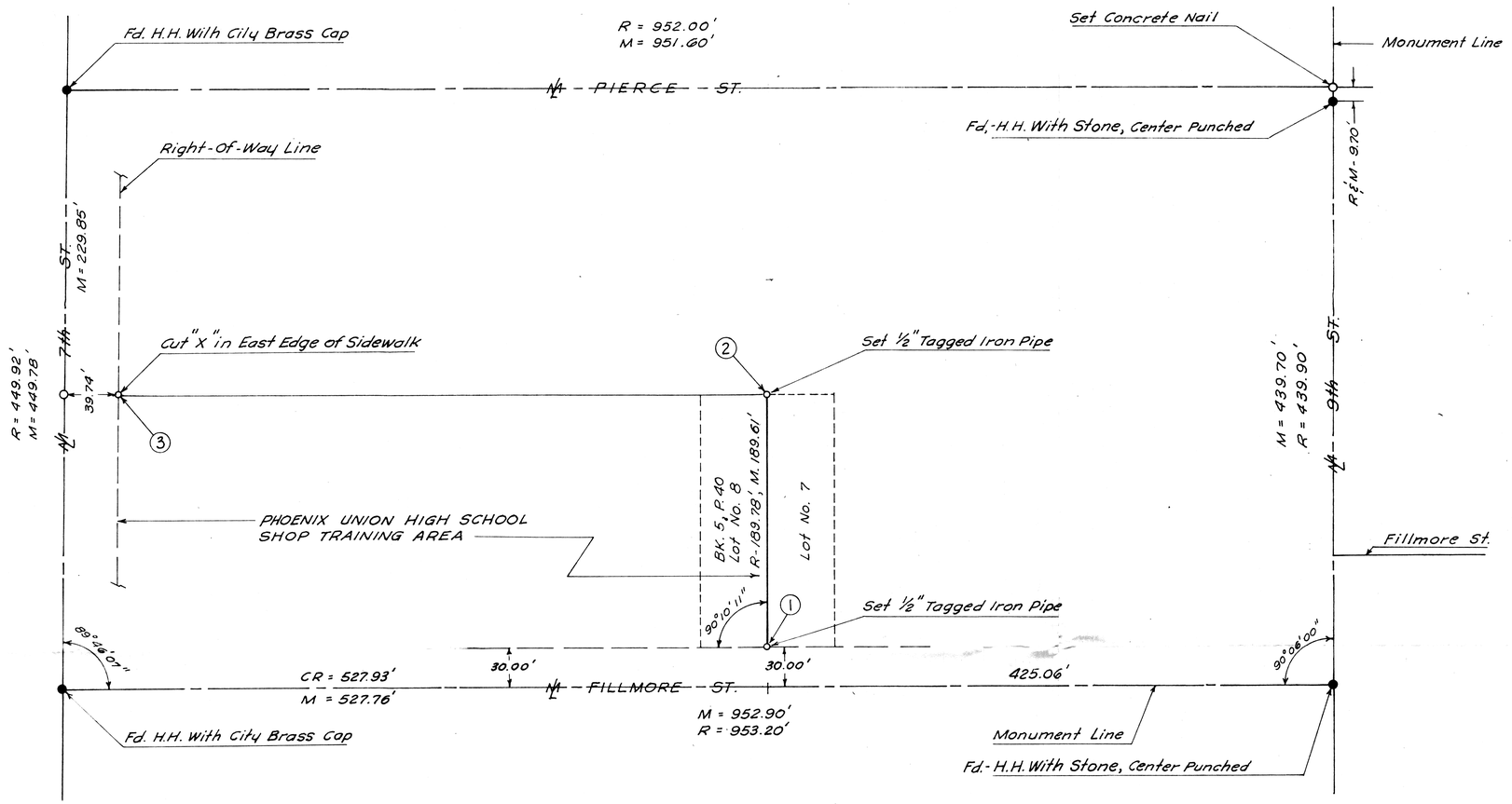

N

Scale 1" = 50'

LEGEND

- ○ – ½" Iron Pipe Set, Tagged L.S. 16811
- ● – Mon. Fd. as Noted
- R – M.C.R. and official City Phoenix, Maps
- CR – Calc. From R.
- M – Measured in Field

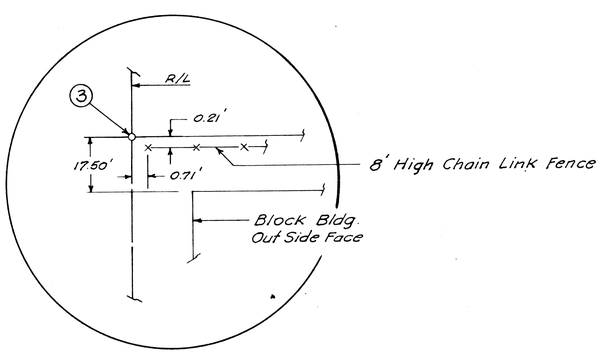

DETAIL N.W. CORNER P.U.H.S. TRAINING AREA

NOT TO SCALE

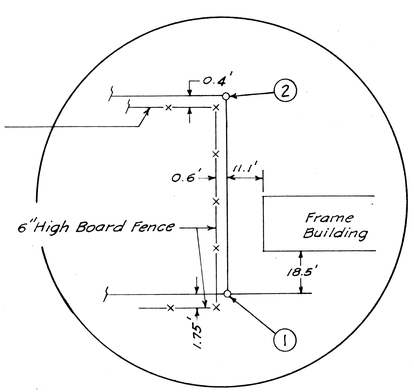

DETAIL E. LINE LOT 8

The field work for the Survey shown hereon was done under my supervision on April 27th and 28th, 1970.

Eugene [illegible]

REGISTERED LAND SURVEYOR
CERTIFICATE NO. 16811
ARIZONA, U.S.A.

ARIZONA SURVEYING SERVICE

2802 W. Solano Dr. N., Phoenix, Arizona

Drawing No. L-70-4590

DIN # 61093