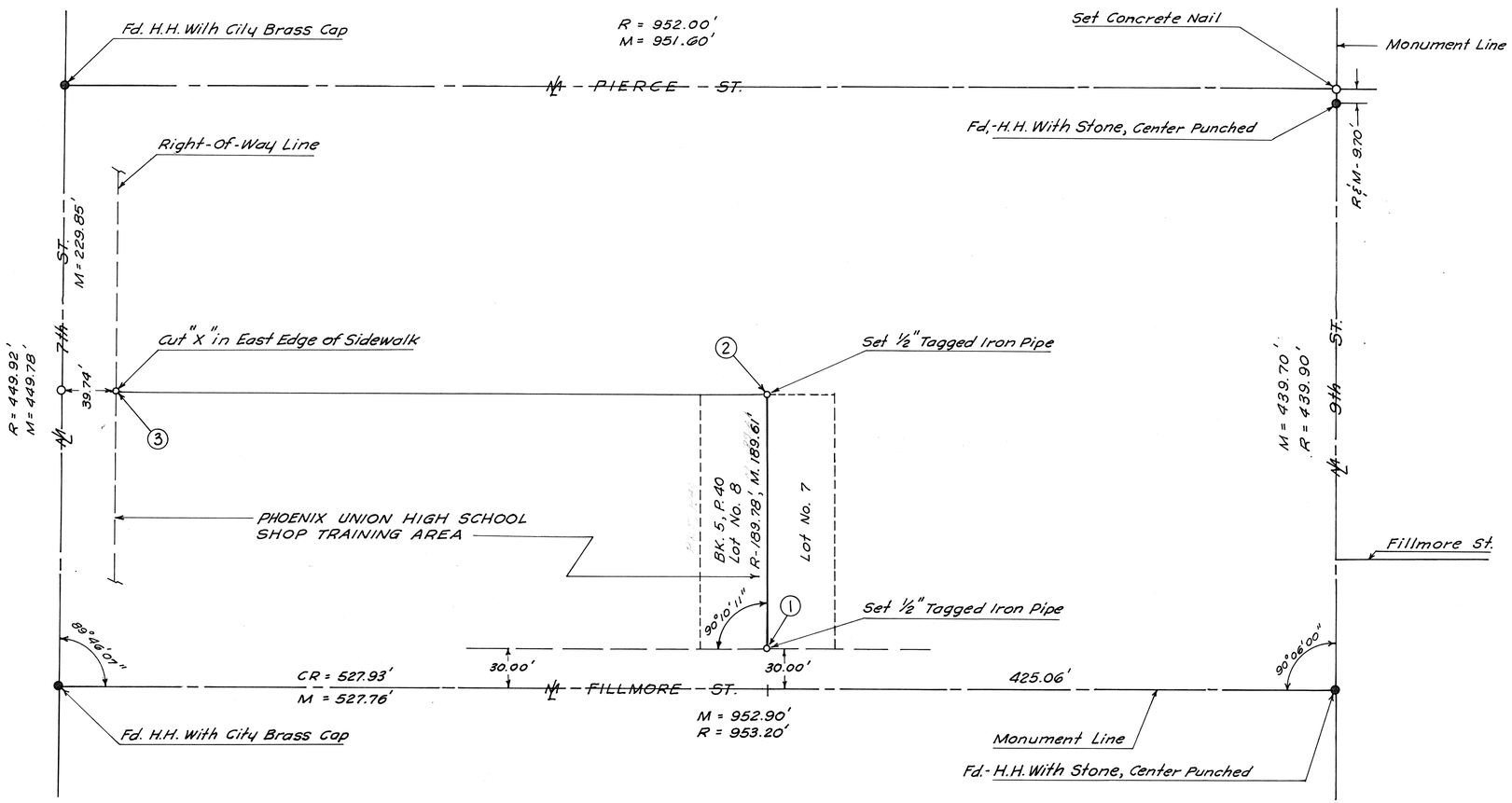

REPORT OF SURVEY

FOR

PHOENIX UNION HIGH SCHOOL SYSTEM

P. O. BOX 3947
PHOENIX, ARIZONA

OF

The East Line of Lot 8, Jones Subdivision Book 5 of Maps, Page 40, M.C.R and the N.W. Cor. N. 190', Lot 4, Block 6, Dennis Addition Book 1 of Maps, Page 8, M.C.R.

N

Scale 1" = 50'

LEGEND

- ○ – 1/2" Iron Pipe Set, Tagged L.S. 1681
- ● – Mon. Fd. as Noted
- R – M.C.R. and official City Phoenix, Maps
- CR – Calc. From R.
- M – Measured in Field

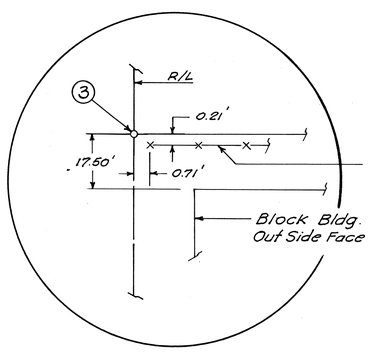

DETAIL N.W. CORNER P.U.H.S. TRAINING AREA

8' High Chain Link Fence

NOT TO SCALE

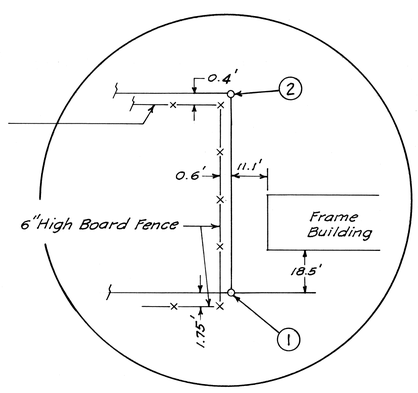

DETAIL E. LINE LOT 8

The field work for the Survey shown hereon was done under my supervision on April 27th and 28th, 1970.

REGISTERED LAND SURVEYOR CERTIFICATE NO. 1681 EUGENE R. SHELLEY ARIZONA, U.S.A.

ARIZONA SURVEYING SERVICE

2802 W. Solano Dr. N., Phoenix, Arizona

Drawing No. L-70-4590

DIN # 59381 1 of 1