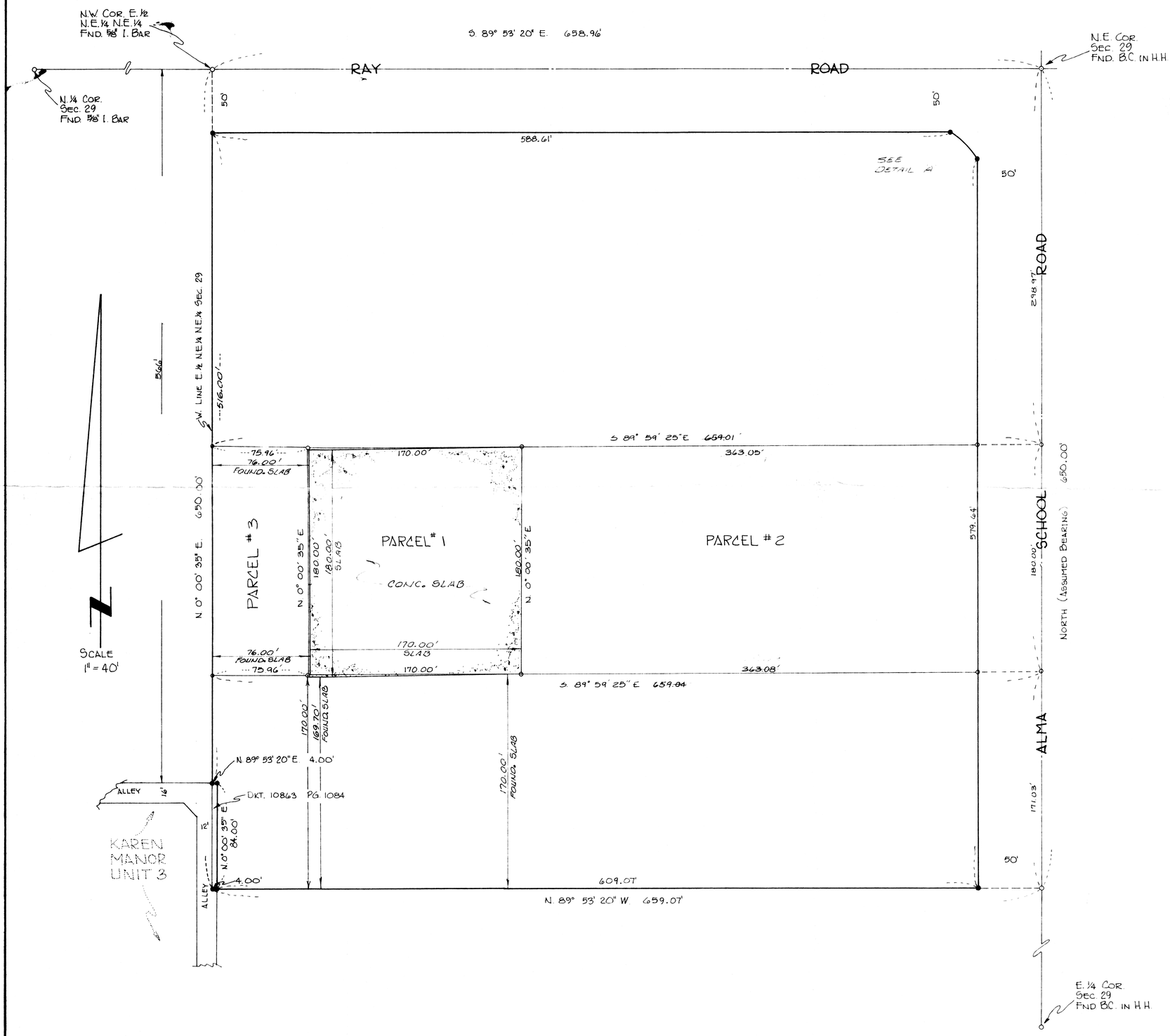

RESULTS OF SURVEY MAP

OF THE

N. 650.00' OF THE E.½ N.E.¼ N.E.¼
SECTION 29 T.1S. R.5E. G.&S.R.B.&M.
MARICOPA COUNTY,
ARIZONA

FOR

G.B. INVESTMENT CO.

NOTES:

THIS SURVEY HAS BEEN MADE IN ACCORDANCE WITH LEGAL DESCRIPTION AND INSTRUCTIONS AS FURNISHED BY THE CLIENT.

THIS SURVEY WAS MADE DURING THE MONTH OF JULY, 1975.

●..... INDICATES SET IRON BAR.

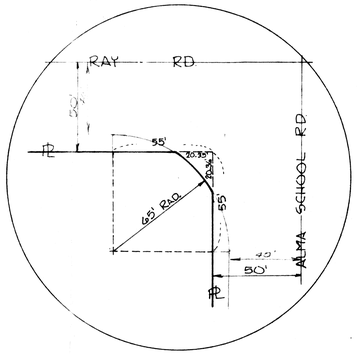

DETAIL A

DIN 59201-2

WECKERLY & ASSOCIATES
SURVEYORS-ENGINEERS
337 N. ARIZONA AVENUE
CHANDLER, ARIZONA
963-6481

REVISED 9-12-75

JOB NO. 731102

G.B. INVESTMENT CO. (BASHA'S SHOPPING CENTER)