BUREAU OF RECLAMATION

ARIZONA PROJECTS OFFICE

BY Rieck	DATE 3-17-87	FEATURE Granite Reef Aqueduct Reach-11
17 SECTION	3N TOWNSHIP	5E RANGE G.S.R.M.

ARIZONA STATE PLANE COORDINATES Central ZONE

GRID FACTOR 0.999831 MEAN ELEVATION 1455

FIELD BOOKS 330-344-05.16.00.04-2

* Aerial Tie

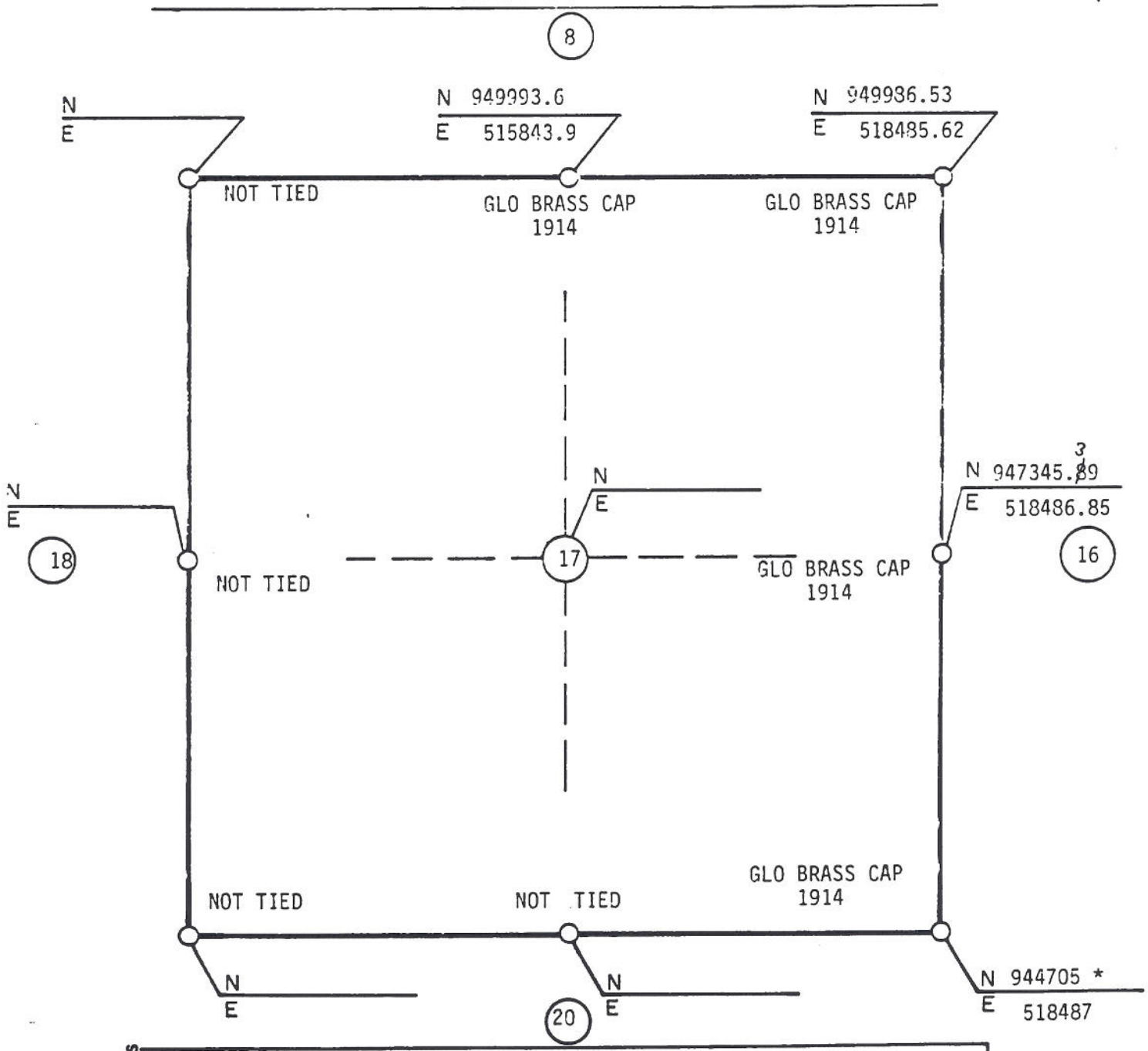

REVISIONS	

ALL BEARINGS AND DISTANCES ARE GRID

DIN# 49991-1